PARTS LIST			
ITEM	QTY	PART NUMBER	DESCRIPTION
1	1	GR2LL5075HCB8-10	Shoe Moulding, Aluminum, Level lock Plus, For .5 to .75 Glass, 2.75 Wide, 3.75 High, 10 Foot Lengths, Hole Counterbored, 8 in on Center, Mill Finish
2	1	LL3421	Level Lock Plus, Mechanism 10 Pack, for 3/4" Nominal Glass, .705-.906"
3	1	GR9LL1250	Shoe Isolator, Level Lock +, HDPE, 0.125 x 0.50 x 2.00, 10 pack

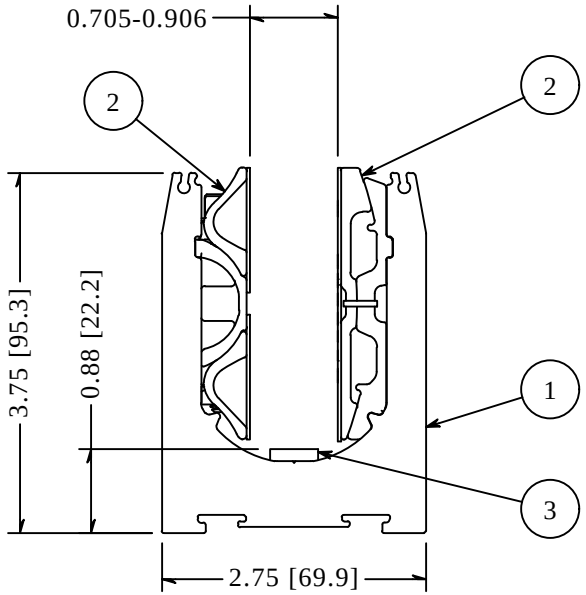

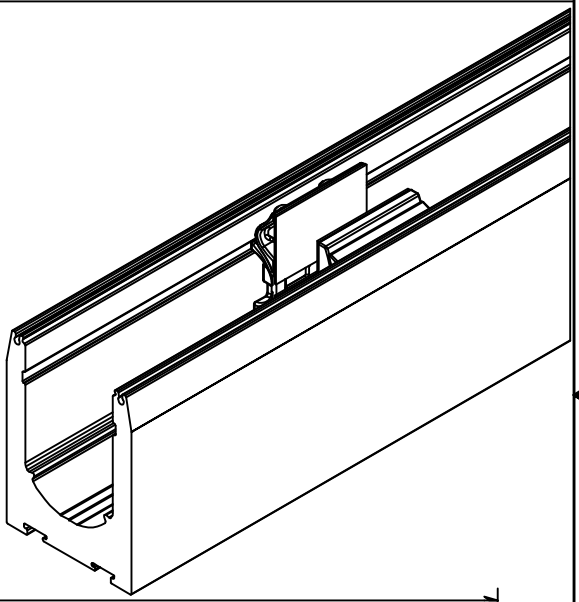

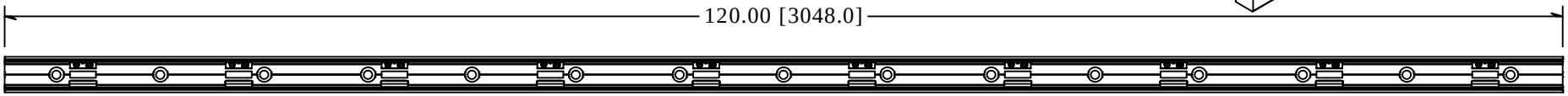

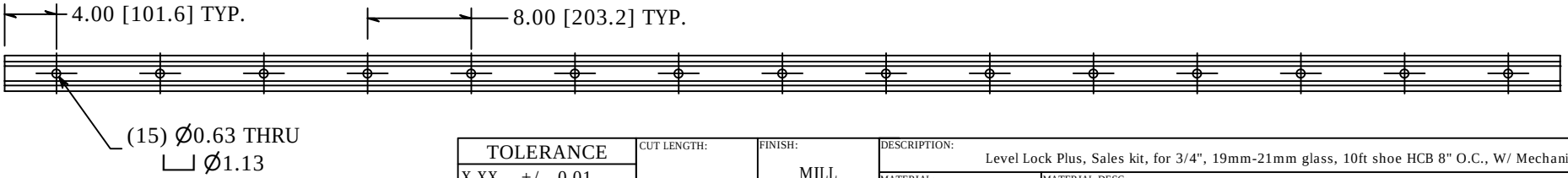

TOLERANCE	CUT LENGTH:	FINISH:	DESCRIPTION: Level Lock Plus, Sales kit, for 3/4", 19mm-21mm glass, 10ft shoe HCB 8" O.C., W/ Mechanisms
X.XX +/- 0.01 X.XXX +/- 0.005 Angle +/- 0.5 Unless Otherwise Specified		MILL	MATERIAL: / MATERIAL DESC:
	DEVELOPED LENGTH: 10FT	WEIGHT: N/A	DATE: 4/8/2021 / REV: 1
	TOOL NUMBER:		DRAWN BY: A. Seeboth
			PART NUMBER: LL3421.8KIT10

WAGNER™ COLLABORATIVE METALWORKS
10600 W Brown Deer Rd
Milwaukee, WI 53224
http://www.wagnercompanies.com/