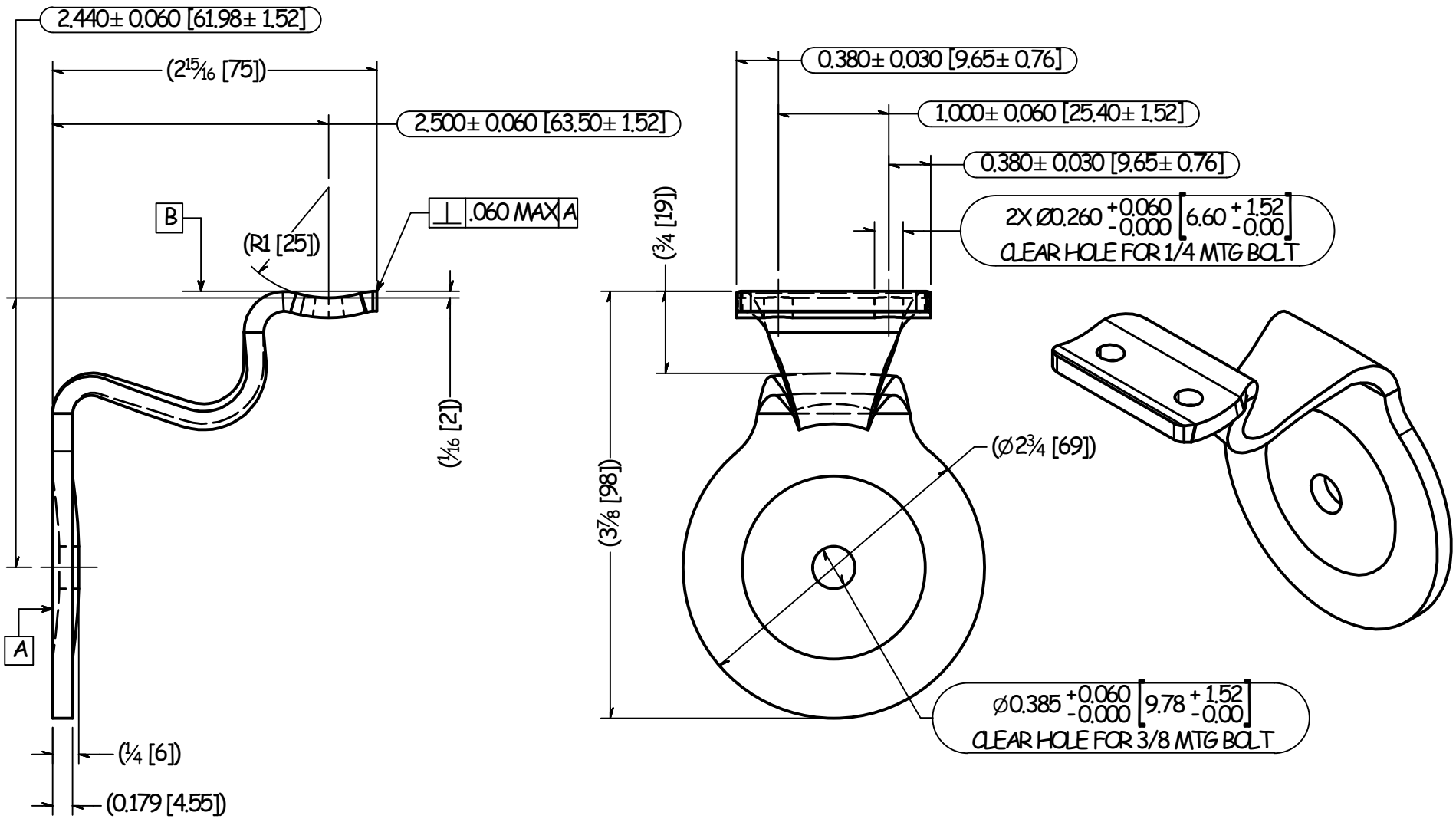

NOTES:
1. DIMENSIONS SHOWN AS INCHES [MILLIMETERS].
2. DIMENSIONS WITH (XXX) DENOTE AS REFERENCE.
3. ENCIRCLED DIMENSIONS DENOTE AS CRITICAL DIMENSIONS.
4. BURRS 0.015 MAX. [0.381]

TOLERANCE	CUT LENGTH:	FINISH:	DESCRIPTION:		
FRACTION: X/XX.....= ± 1/16" over 4ft. DECIMAL: X.XX.....= ± .030 X.XXX.....= ± .010 UNLESS OTHERWISE NOTED		MILL	BRACKET ST STYLE B 2.50 1HOLE		
	DEVELOPED LENGTH:	WEIGHT:	MATERIAL: C7100	MATERIAL DESC: 7 Ga. Steel Coil 8 X .1793	
		0.52 lbmass	DATE: 10/8/2009	THE WAGNER COMPANIES R & B WAGNER, INC. AND J. G. BRAUN CO.	
	TOOL NUMBER: TL8011	SIZE: A	DRAWN BY:		
			ITEM NUMBER: 3418	SHEET: 1 OF 1	DRAWING NUMBER: 3418 REV: 1